1. ALL RESISTANCE VALUES ARE IN OHMS, 0.1 WATT +/- 5%.
2. ALL CAPACITANCE VALUES ARE IN MICROFARADS.
3. ALL CRYSTALS & OSCILLATOR VALUES ARE IN HERTZ.

REV	ECN	DESCRIPTION OF REVISION	CK APPD / DATE
1	0018083669	ENGINEERING RELEASED	2019-06-05

LAST_MODIFICATION=Tue Jun 4 16:38:40 2019

PAGE	CSA	CONTENTS	SYNC	DATE
1	1	TOC		
2	2	Mesa	J132_MLB	03/10/2017
3	3	Audio Jack Codec	AHAAGE_AUD	03/15/2017
4	4	Speaker Amp		
5	5	Audio Connectors		
6	6	speaker, mesa, and flex connectors		
7	7	Aliases and PD parts		

ALTERNATES

PART NUMBER	ALTERNATE FOR PART NUMBER	BOM OPTION	REF DES	COMMENTS:	ALT VENDOR	PRIMARY VENDOR
152S00434	152S1829		ALL	RDAR://32517988	CYNTEC	TDK
377S0176	377S00002		ALL	RDAR://32496803	ST	DIODES
353S00878	353S00599		ALL	RDAR://32497391	TI	ON SEMI
353S00879	353S00754		ALL	RDAR://32497422	PANASONIC	KEMET
353S00852	353S4262		ALL	RDAR://32497451	ON SEMI	TI
128S00009	128S00070		ALL	RDAR://32500343	ON SEMI	TI
128S00093	128S00070		ALL	RDAR://37552532	KEMET	NEC
155S00203	155S00894		ALL	RDAR://32518520	PANASONIC	NEC
155S00034	155S0706		ALL	RDAR://32518226	ROHM	NEC
155S00018	155S0664		ALL	RDAR://32518179	TAIYO	MURATA
155S0660	155S0513		ALL	RDAR://32518111	MURATA	TAIYO
155S0694	155S0387		ALL	RDAR://32518079	TAIYO	MURATA
138S0703	138S0648		ALL	RDAR://32627510	MURATA	TDK
138S0660	138S0684		ALL	RDAR://32627590	MURATA	TAIYO
138S0689	138S0701		ALL	RDAR://32627777		
138S00049	138S0831		ALL	RDAR://32664064		
138S00104	138S0978		ALL	RDAR://32664485		
155S00203	155S0894		ALL	RDAR://32518520		

PART NUMBER	QTY	DESCRIPTION		REFERENCE DES	CRITICAL	BOM OPTION
051-05325	1	SCHEM,RIO,X1032	SCH			
820-01992	1	PCBF,RIO,X1032	RIO	CRITICAL		
685-00333	1	COMMON PARTS,RIO,X1032	CBOM	CRITICAL	CMN_PARTS_BOM	
514-00098	1	AUDIO JACK,A	J0500	CRITICAL	A	
514-00154	1	AUDIO JACK,B	J0500	CRITICAL	B	
514-00108	1	AUDIO JACK,G	J0500	CRITICAL	G	

BOM NUMBER	BOM NAME	BOM OPTIONS
639-08827	PCBA,RIO-A,X1783	CMN_PARTS_BOM,A
639-08828	PCBA,RIO-B,X1783	CMN_PARTS_BOM,B
639-08826	PCBA,RIO-G,X1783	CMN_PARTS_BOM,G
685-00333	COMMON PARTS,RIO,X1783	ALTERNATE,COMMON

DRAWING TITLE

SCHEM,RIO,X1783

ISOLATE FROM OTHER COMPONENTS/NETS AS MUCH AS POSSIBLE

MOJAVE 16V BOOST

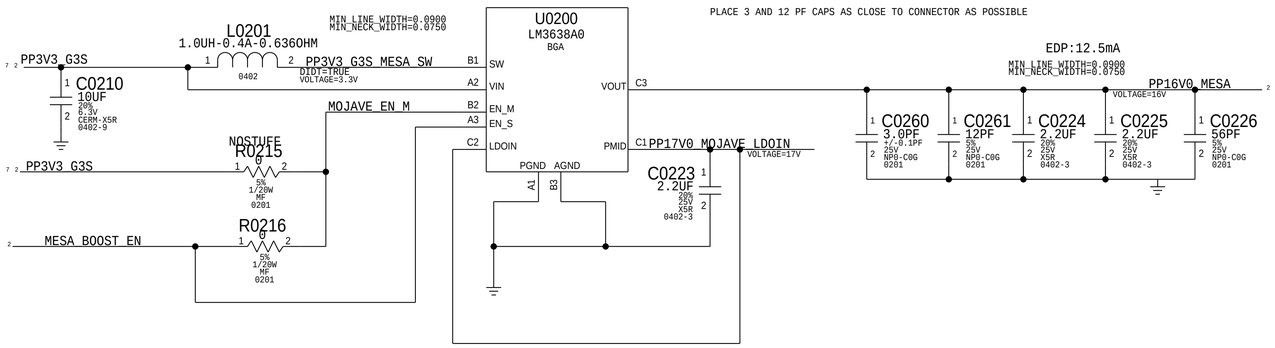

3.0V MESA

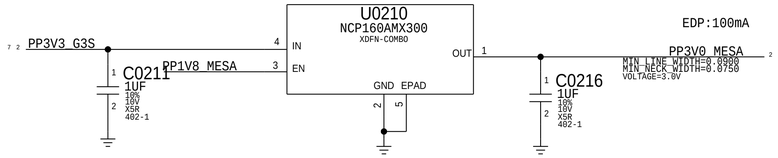

1.8V MESA

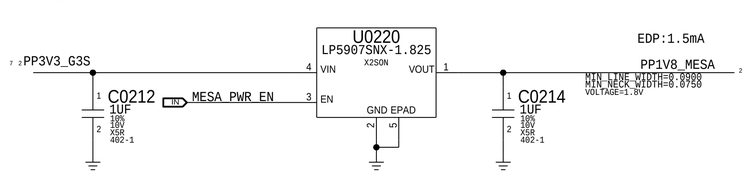

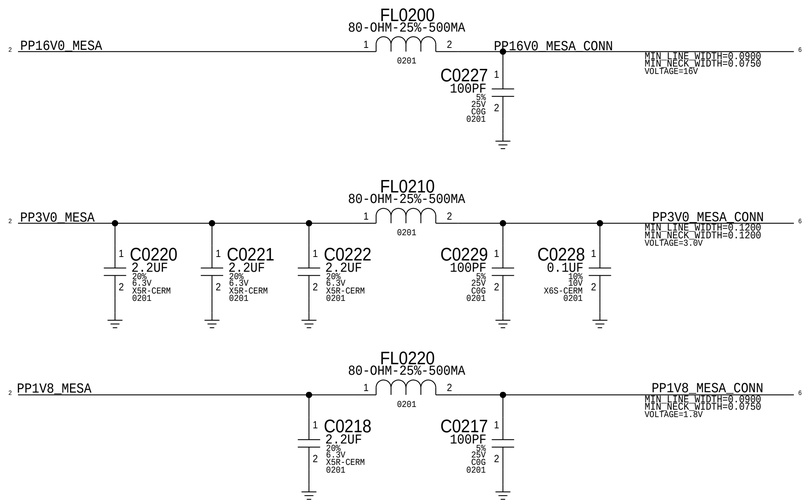

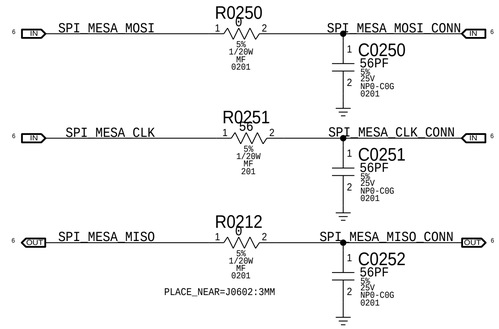

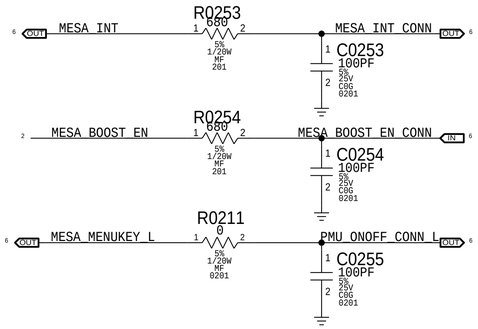

Mesa Power Sequencing Requirements

Power On: 1V8 -> 3V3 -> 16V0

BOM_COST_GROUP=T151

PAGE TITLE

Mesa

AUDIO JACK CODEC I2C ADDRESS		
AD1	AD0	ADDRESS
GND	GND	0x48 <--
GND	1.8V	0x49
1.8V	GND	0x4A
1.8V	1.8V	0x4B

L0361 FERR-470-OHM 0201
AUD_PWR_EN (IN) — L83_LDO_EN
L0360 FERR-22-OHM-1A-0.055OHM 0201
PP3V3_G3S — AUD_3V3_S0
PP1V8_G3S — R0361 0 5% 1/20W MF 0201
U0360 LP5907UVX-1.8 DSBGA (NOSTUFF)
VIN (A1) ← AUD_3V3_S0; VEN (B1) ← L83_LDO_EN; GND (B2); VOUT (A2) → PP1V8_CODEC VOLTAGE=1.8V
R0360 47K 5% 1/20W MF 201 (NOSTUFF) — VIN to VEN
BYPASS=U0360.A1:B2:3 MM — C0360 1UF 20% 10V CER-X5R 0201
NOSTUFF C0361 1UF 20% 10V CER-X5R 0201 — BYPASS=U0360.A2:B2:3 MM
XW0300 SHORT-8L-0.25MM-SM — GND_AUDIO_CODEC
NOSTUFF C0390 3.0PF +/-0.1PF 25V NP0-C0G 0201
NOSTUFF C0391 12PF 5% 25V NP0-C0G 0201

L0300 FERR-22-OHM-1A-0.055OHM 0201
PP1V8_CODEC — L83_VCP (MIN_LINE_WIDTH=0.5000, MIN_NECK_WIDTH=0.2000)
BYPASS=U0300.B1:C2:3 MM — C0301 2.2UF 20% 10V X5R-CERM 402 CRITICAL — GND_AUDIO_CODEC
L0301 FERR-22-OHM-1A-0.055OHM 0201
PP1V8_G3S — L83_VL (MIN_LINE_WIDTH=0.1500, MIN_NECK_WIDTH=0.1000)
C0303 0.1UF 10% 25V X5R 0201
L0302 FERR-22-OHM-1A-0.055OHM 0201
PP3V3_G3S — L83_VP (MIN_LINE_WIDTH=0.1000, MIN_NECK_WIDTH=0.0800)
C0304 10UF 20% 10V X5R 0402 CRITICAL

CRITICAL C0302 2.2UF 20% 10V X5R-CERM 402 — BYPASS=U0300.D6:F6:3 MM — L83_VCP_FILT_GND (MIN_LINE_WIDTH=0.5000, MIN_NECK_WIDTH=0.2000) — XW0301 SM
L83_VCP_FILTP (MIN_LINE_WIDTH=0.5000, MIN_NECK_WIDTH=0.2000)
CRITICAL C0305 4.7UF 20% 10V X5R 0402
CRITICAL C0306 4.7UF 20% 10V X5R 0402
L83_VCP_FILTN (MIN_LINE_WIDTH=0.5000, MIN_NECK_WIDTH=0.2000)

AUD_HP_PORT_L (OUT) — R0300 1K 5% 1/20W MF 201 — GND_AUDIO_CODEC — R0301 1K 5% 1/20W MF 201 — AUD_HP_PORT_R (OUT)

U0300 CS42L83A WLCSP-SKT (CRITICAL)

AUD_HP_SENSE_L (IN)	D5	HPSENSA	
	E5	HPOUTA	
AUD_HP_SENSE_R (IN)	F5	HPSENSB	
	G5	HPOUTB	
AUD_HP_PORT_CH_GND (BI)	F1	HS4	
	E2	HS_CLAMP2	
	E1	HSIN+	
AUD_HP_PORT_US_GND (BI)	G2	HS3	
	F2	HS_CLAMP1	
	D1	HSIN-	
	F4	HS4_REF	
	G4	HS3_REF	
	G3	RING_SENSE	
	E4	TIP_SENSE	
L83_HSBIAS_FILT	F3	HSBIAS_FILT	
L83_HSBIAS_FILT_REF	E3	HSBIAS_FILT_REF	
	E6	+VCP_FILT	
	G6	-VCP_FILT	
	F6	GNDCP	
	C4	VL_SEL	
	D4	DIGLDO_PDN*	
	B7	INT*	
	C6	WAKE*	
	C5	RESET*	
	A6	SPDIF_TX	NC
	D3	SWIRE_SEL	
	B5	ASP_LRCK/FSYNC	
	A5	SWIRE_SD/ASP_SDIN	
	A4	ASP_SDOUT	
	B4	SWIRE_CLK/ASP_SCLK	
	C3	AD0	
	B2	AD1	
I2C_RIO_SDA (BI)	A1	SDA	
I2C_RIO_SCL (IN)	A2	SCL	
L83_FLYP	E7	FLYP	
L83_FLYC	F7	FLYC	
L83_FLYN	G7	FLYN	
L83_FILT	C1	FILT_P	
	B3	GNDL	
	B6	GNDD	
	C7	GNDHS	
	G1	GNDA	
	C2	VP	
	D2	VL	
	A3	VD_FILT	
	A7	VA	NC
	B1	VCP	
	D6		

PLACE_NEAR=U0300.A4:5mm
I2S_CODEC_D2R_R — R0307 33 5% 1/20W MF 201 — I2S_CODEC_D2R

BYPASS=U0300.G7:F7:3 MM — CRITICAL C0307 2.2UF 20% 10V X5R-CERM 402 — MIN_LINE_WIDTH=0.2000, MIN_NECK_WIDTH=0.0700
BYPASS=U0300.E7:F7:3 MM — CRITICAL C0308 2.2UF 20% 10V X5R-CERM 402 — MIN_LINE_WIDTH=0.2000, MIN_NECK_WIDTH=0.0700

BYPASS=U0300.C1:C2:3 MM — CRITICAL C0310 10UF 20% 10V X5R 0603
GND_AUDIO_CODEC — MIN_LINE_WIDTH=0.0900, MIN_NECK_WIDTH=0.0750, VOLTAGE=0V

C0309 4.7UF 20% 6.3V X5R 402 CRITICAL — BYPASS=U0300.F3:E3:3 MM

L83_VP — R0309 470K 5% 1/20W MF 201 (NOSTUFF) — R0310 470K 5% 1/20W MF 201 (NOSTUFF)
AUD_RING_SENSE (IN)
AUD_TIP_SENSE (IN)

AUD_HS_MIC_P (IN) — R0351 0 5% 1/20W MF 0201 (NOSTUFF) — HS_MIC_P (MIN_LINE_WIDTH=0.5000, MIN_NECK_WIDTH=0.1000)
C0352 27PF 5% 25V C0G 0201 (NOSTUFF CRITICAL)
C0351 3300PF 10% 16V X7R-CERM 0201 (NOSTUFF CRITICAL)
R0350 100K 5% 1/20W MF 201 (NOSTUFF) — HS_MIC_N (MIN_LINE_WIDTH=0.5000, MIN_NECK_WIDTH=0.1000)
AUD_HS_MIC_N (IN) — R0352 0 5% 1/20W MF 0201
R/C6550 FILTER TO ADDRESS OUT-OF-BAND NOISE ISSUE SEEN ON EARLY HEADSETS (SEE RADAR # 6210118)

CODEC_INT_L (OUT) — CODEC_WAKE_L (OUT) — CODEC_RESET_L (IN)
R0304 47K 5% 1/20W MF 201
C0320 1000PF 10% 25V X7R 0201
I2S_CODEC_LRCLK (IN) — I2S_CODEC_R2D (IN) — I2S_CODEC_D2R (OUT) — I2S_CODEC_BCLK (IN)

BOM_COST_GROUP=AUDIO

DESIGN: X502/DEV_MLB_U
LAST CHANGE: Wed Feb 18 17:31:01 2015
PAGE TITLE
Audio Jack Codec

1X MONO SPEAKER AMPLIFIER

APN: 353S01629
GAIN: 0DBFS = 6.31VRMS

RIGHT AMPLIFIER

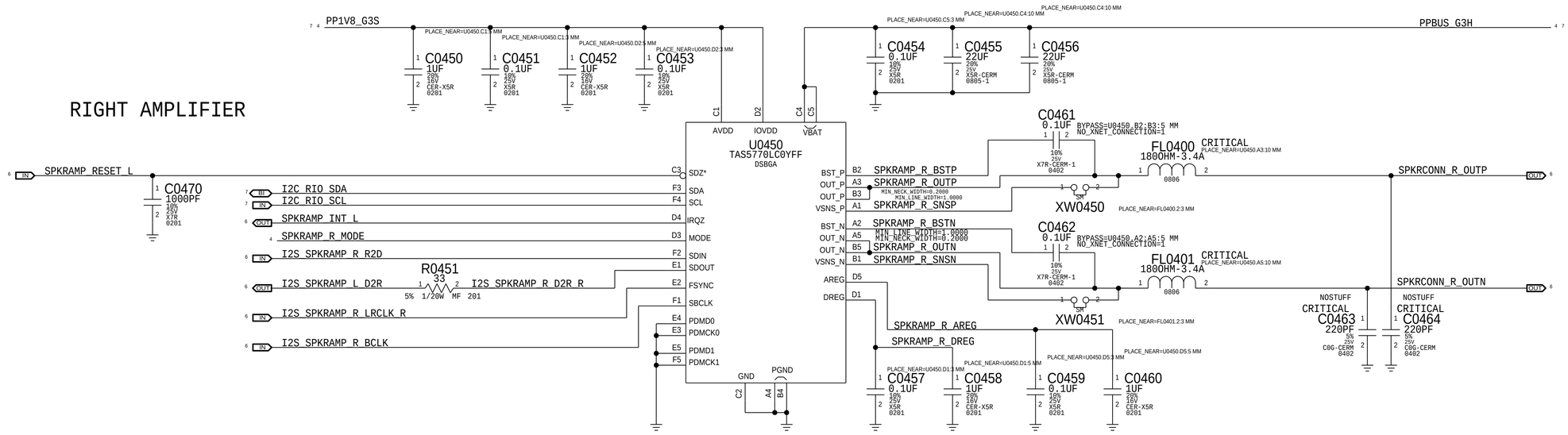

RIGHT BULK CAPACITANCE

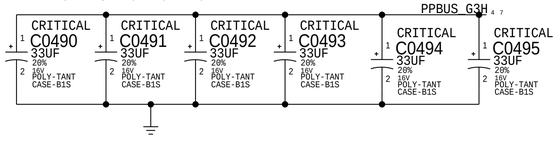



MODE PIN	I2C ADDR	CHANNEL
GND	0x31	LEFT
470 to GND	0x32	
470 to IOVDD	0x33	
2k2 to GND	0x34	
2k2 to IOVDD	0x35	
10k to GND	0x36	
10k to IOVDD	0x37	
47k to IOVDD	0x38	RIGHT

PAGE TITLE
Speaker Amp

BOM_COST_GROP=AUDIO

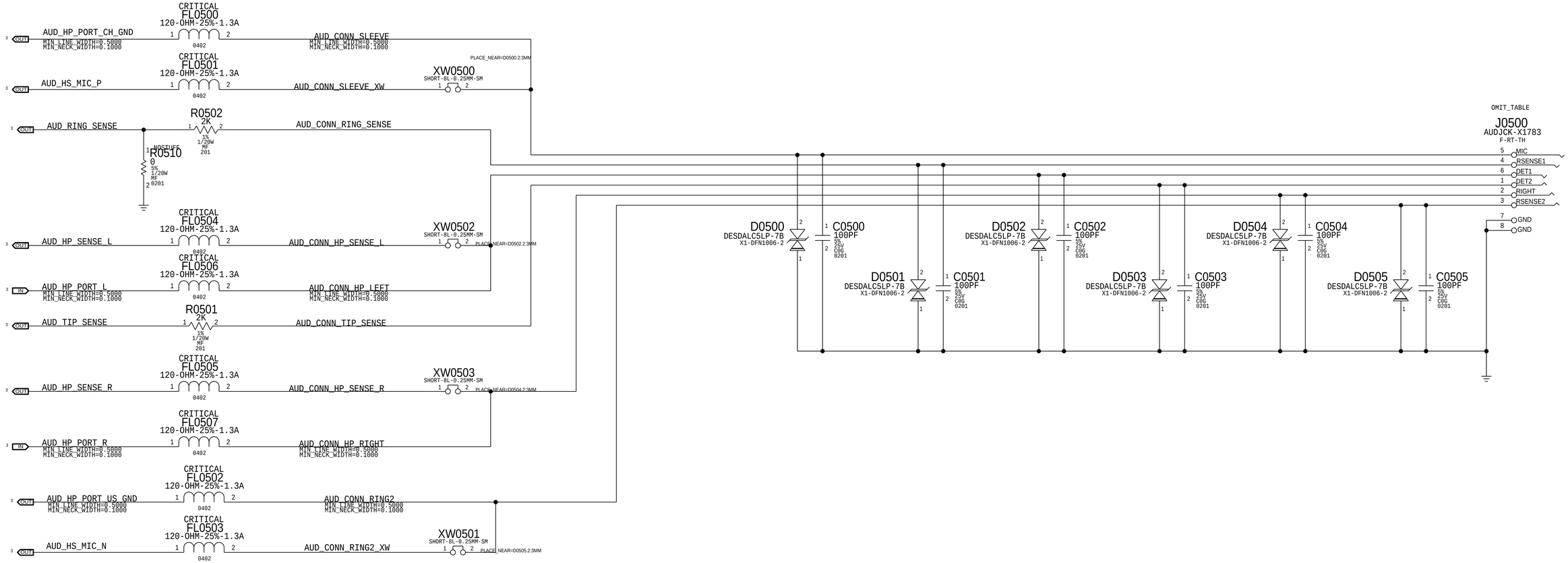

PAGE TITLE

Audio Connectors

BOM_COST_GROP=AUDIO

APN: 516S00038

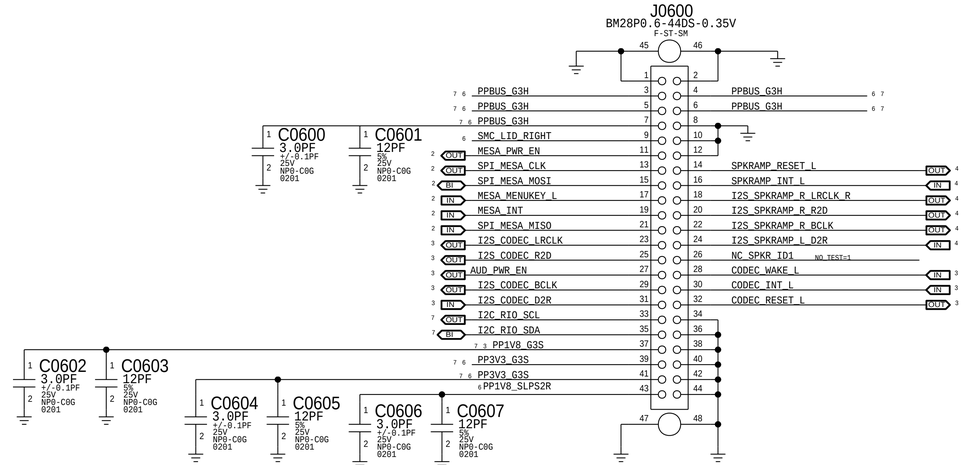

MESA CONNECTOR
APN 516S00203

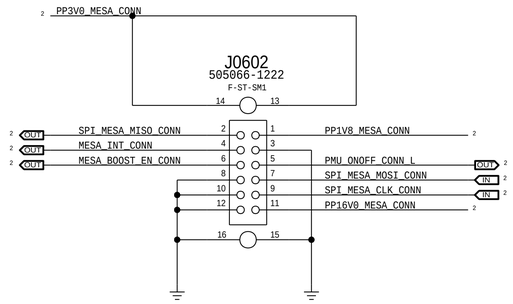

SPEAKER CABLE (MAY CHANGE TO FLEX)

APN 518S0588

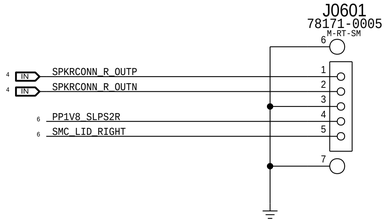

BOM_COST_GROP=AUDIO

PAGE TITLE
speaker, mesa, and flex connectors

PP3V3_G3S
MAKE_BASE=TRUE
VOLTAGE=3.3V
PP3V3_G3S
PP3V3_G3S

I2C_RIO_SDA
MAKE_BASE=TRUE
CKPLUS_WAIVE=I2C_PULLUP
I2C_RIO_SDA
I2C_RIO_SDA

I2C_RIO_SCL
MAKE_BASE=TRUE
CKPLUS_WAIVE=I2C_PULLUP
I2C_RIO_SCL
I2C_RIO_SCL

PPBUS_G3H
MAKE_BASE=TRUE
VOLTAGE=12.7V
PPBUS_G3H

PP1V8_G3S
MAKE_BASE=TRUE
VOLTAGE=1.8V
PP1V8_G3S
PP1V8_G3S

COWLING BOSSES

SH0700
2.9OD1.5ID-1.55H-SM

SH0701
2.9OD1.5ID-1.55H-SM

SH0702
2.9OD1.5ID-1.55H-SM

BOM_COST_GROP=MECHANICALS

PAGE TITLE
Aliases and PD parts